Visionen leben

asphericon

asphericon MountedOptics

AFM25-25

Order the UV fused silica asphere AFL25-25 as mounted lens and benefit from a perfectly aligned asphere.

Key Benefits:

= Thread: M28 x 0.75

= Modular design for high compatibility to common optical systems

= Clearly labeled specifications on mount for comfortable handling

= Available with 4 standard coatings

Technical Dimensions:

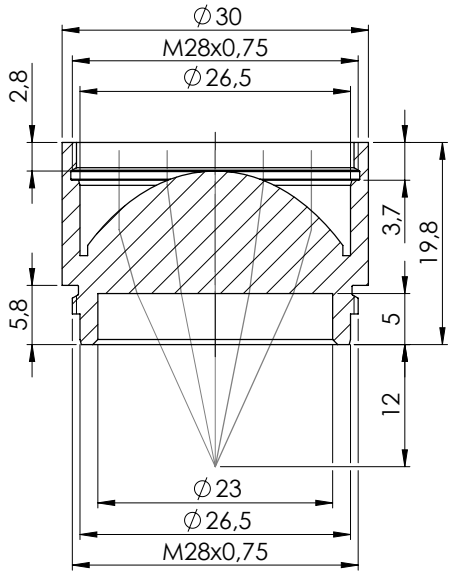

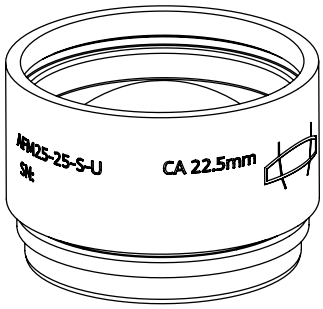

+49 (0) 3641 - 3100 560
+1 - 941 - 564 0890

+49 (0) 3641 - 3100 561
+1 - 941 - 584 4071

sales@asphericon.com

www.asphericon.com

asphericon GmbH
Stockholmer Str. 9 | 07747 Jena | Germany

asphericon, Inc.
5500 Bee Ridge Road, Suite 104 | Sarasota, FL 34233 | USA