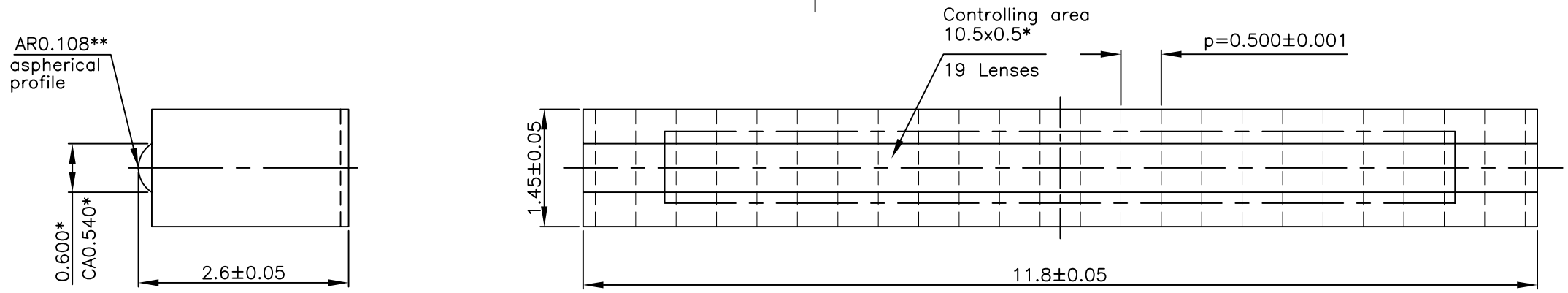

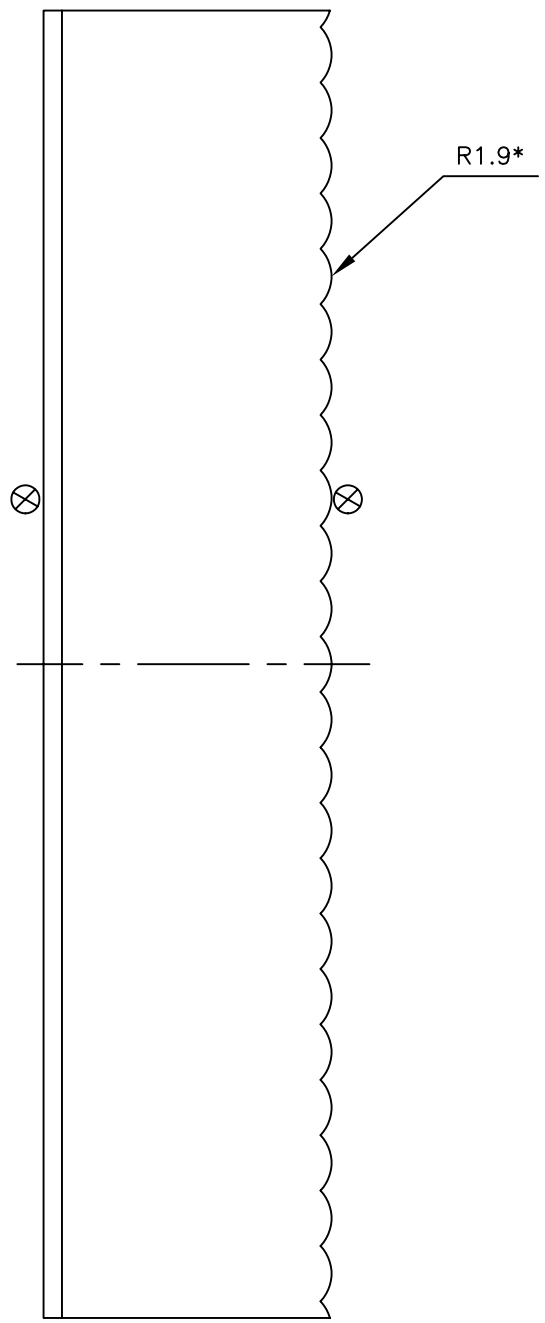

1. * Info value
2. ** Aspherical profile
3. Variation of Focal Length from Lens to Lens: ±1%
   Variation of Focal Length from Array to Array: ±3%
4. ⊗ – AR–coating, R<0.5%@808±20nm
5. Non–toleranced deviations: ISO 10110–11
6. Defects outside the controlling area are not defined

				FS.24.235 [FS.41.252]		Massstab 1:1	
					Datum	Name	SPC-GT-D600-AR0.108/APC-GT-P500-R1.9
				Bearb.			
				Gepr.			
				Norm			
				[aμs] advanced microoptic systems gmbh			Blatt Bl.
Zust	Änderung	Datum	Name	(Urspr.)		(Ers. f.:)	(Ers. d.:)